FM 3757

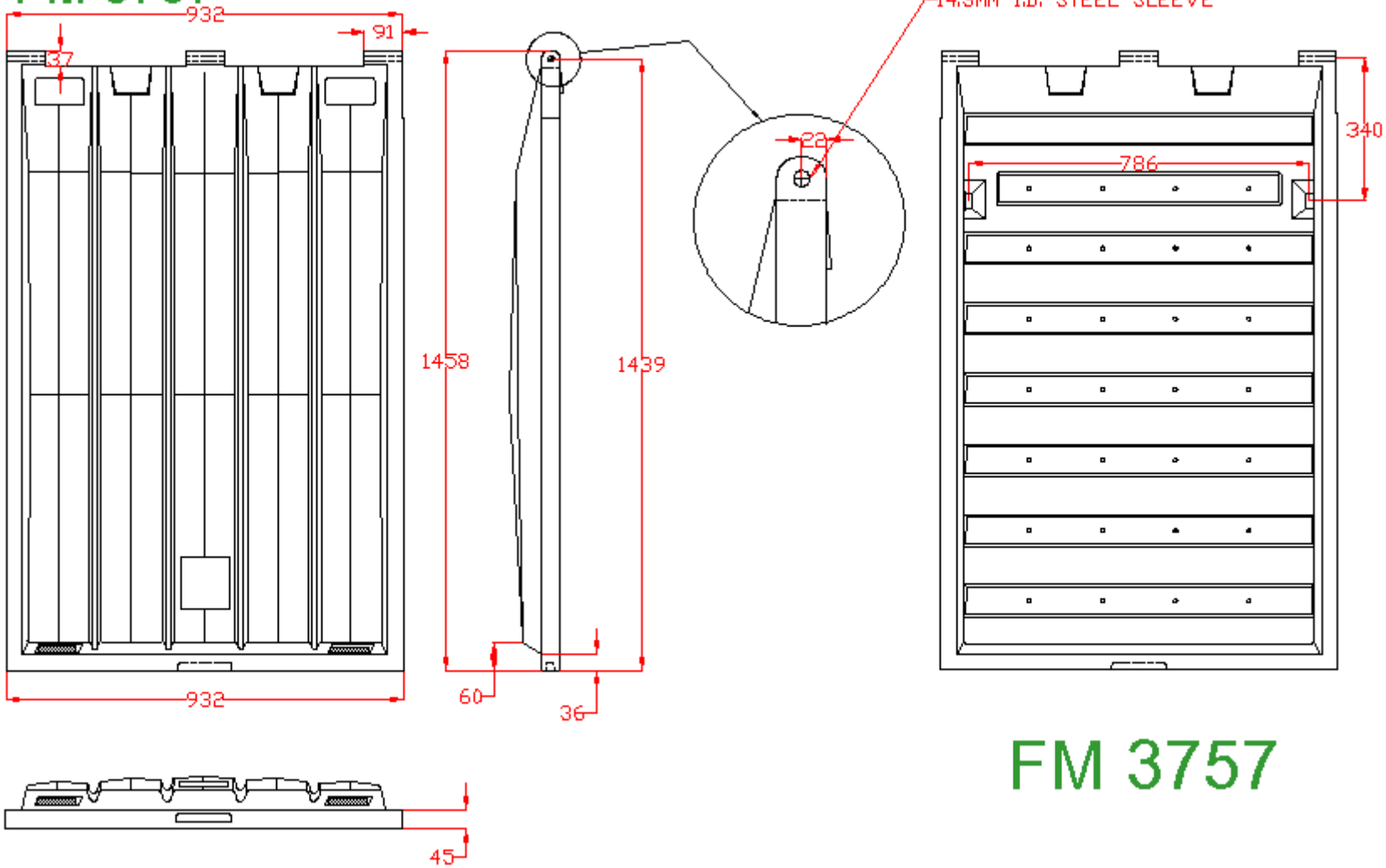

FM 3757